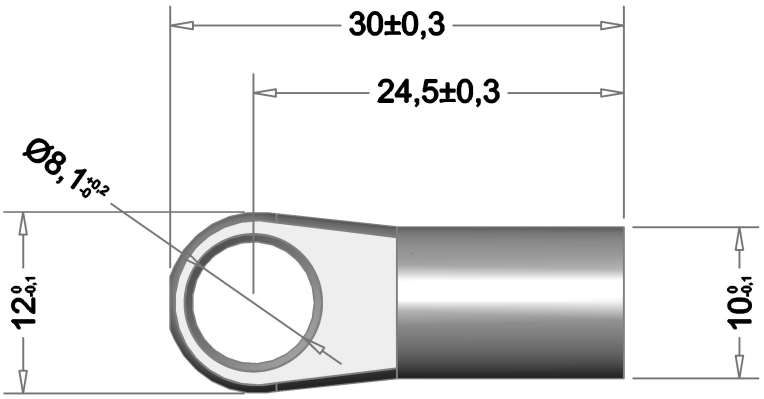

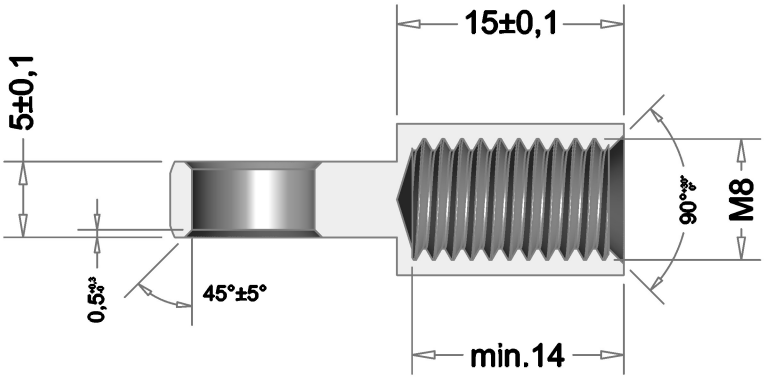

(1:1)

General Tolerances DIN ISO 2768-medium

(C) MK Material Oto. San. ve Tic. Ltd. Şti. All rights reserved.

Mea.	Tolerance	T. Max. Dim.	T. Min. Dim.	Material	Note
				11SMnPb30	-

	Name	Date	Signature	Plating	Quality control:
Drawed By				Zn/White	( ) Product accepted.
Checked By					( ) Product rejected.
Approved By					( ) Product accepted conditionally.
					Date:

Scale	Drawing No / Company Name	Rev. No
2:1	EY412248.8T5	01